MOVABLE ROCKFALL BARRIER (MRB)
ASSEMBLY INFORMATION

The main components of the barrier consist of the steel plates, steel support posts, woven cable nets, support and tie-back ropes and friction brakes. A parts list is included at the end of this document.

Figure 1. Photographs of front and back of MRB: Note location of upper and lower friction brakes in opposing corners on each panel.

The steel plates are numbered and should be laid out in order with the ground anchor lugs located on the impact (in) side of the barrier. Three 1-inch bolts with nuts connect each of the plates. The 11 steel posts are structurally the same and interchangeable, and are aligned with and bolted to the threaded studs with the tie-back flanges oriented toward the impact side.

Perimeter ropes consist of at least 5/8" diameter cable; at least 3 wire rope clips are required for each loop and cable. The upper perimeter wire rope and bottom perimeter wire rope are attached to the connections on the outside of the posts, and both perimeter ropes terminate on the bottom post guides on the outermost posts. (Figs. 2, 3, and 4). Perimeter ropes should be continuous and uninterrupted from outside post to outside post. There should be one friction brake on each perimeter rope between each vertical post in opposing corners of the panel located about 3 feet in from the post (Fig. 1). Slack shall be removed from the perimeter ropes by hand-tensioning prior to securing clips to the ropes. Lateral tie-down ropes (5/8") shall extend from the upper outermost post cable guides down to the end post anchor lugs, hand-tightened, and secured with a thimble and 3 wire rope clips (Fig. 5). Friction bakes should not be included in these lateral tie-downs. Anchors are not required at the end anchor lugs. Interior lateral cross-support cables are not required for systems less than 200 ft.

Tie-back ropes consist of at least 5/8" diameter cable; at least 3 wire rope clips are required for each loop/cable. Thimbles shall be used for each lug; 3/4" shackles can be used as an alternative to thimbles. Slack shall be removed from the tie-back ropes by hand-tensioning prior to securing clips to the ropes.

FOR INFORMATION ONLY

Cable net panels have to be laced to the perimeter wire rope (infrastructure) using the lacing technique approved by the manufacturer (Geobrugg) and as shown in Figures 2, 3 and 4. Corners of the cable net panels shall not pass through the post cable guides. The lacing rope shall go through each cell of the cable net panel, and the lacing rope shall also pass through each cell of adjacent panels on vertical seams. Lacing rope shall not go through post cable guides or friction brakes. Lacing rope shall consist of at least 5/16" diameter cable; at least 2 clips are required for each loop wire rope clips (5/16" diameter).

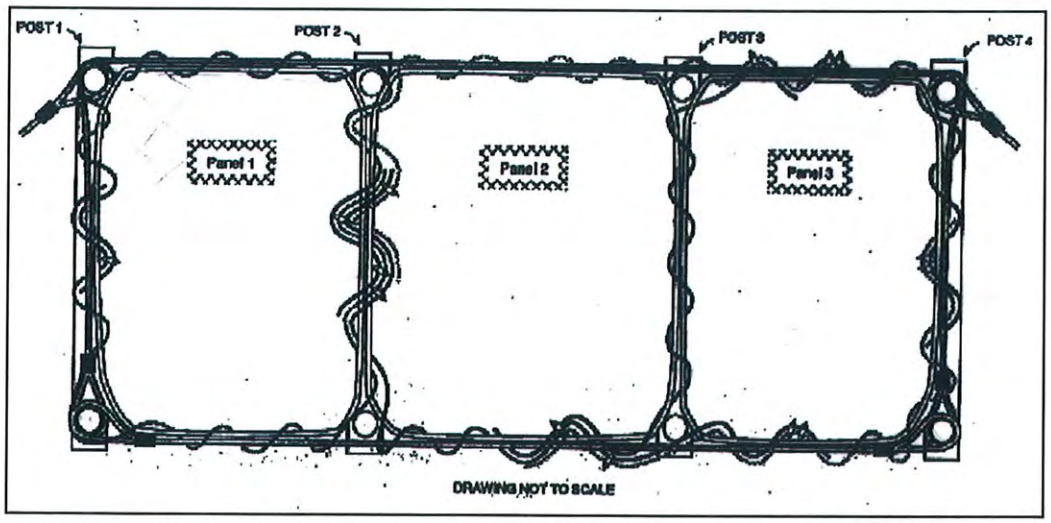

Figure 2. Details of perimeter rope connections and lacing of cable net panels to perimeter ropes.

Figures 3 and 4. Details of the top and bottom of end posts and connection of perimeter ropes and 5/16" lacing rope through each cell of the cable net panel.

FOR INFORMATION ONLY

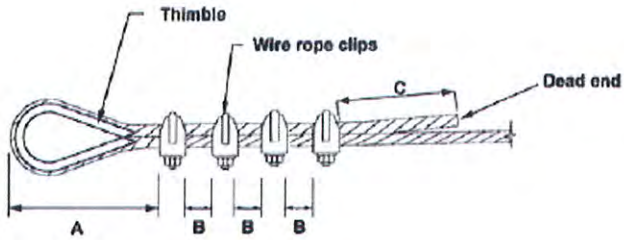

WIRE ROPE DETAIL "AA"
Distances A,B,C and torque to comply with manufacturer's specifications
U-section of wire rope clips must be applied to the dead end of the rope as shown.

Figure 5. End post connection detail and wire clip and thimble configuration.

Chainlink fabric is attached to the inside of the cable net panel with hog rings on spacing no larger than 24" O.C. Shade screen or geotextile can be added on the outside to stop smaller pieces.

The MRB is positioned by pulling from the tow lugs on either end plate. If the barrier is on a slope, such as a highway super-elevation, the barrier may also have to be held in position by another piece of equipment to avoid having the barrier slide down the slope. Steel-tracked excavators have been much more effective at moving the MRB than rubber-tired loaders.

The MRB must be fully anchored to the ground during all scaling operations. There are 11 anchor lugs on the impact side. Anchor devices must have a minimum capacity of 3000 lbf in tension and 7500 lbf in shear. For concrete pavements, Williams B7S threaded rod w/ Williams sledge-drive anchor has been successfully used. Each time the MRB is moved it must be anchored to the ground and a minimum of 20% of the anchors proof-tested in tension.

FOR INFORMATION ONLY

MOVABLE ROCKFALL BARRIER
PARTS LIST

Steel Plates
9 – steel plates (20 ft x 8 ft x 1" thick; ~ 6700 lbs each)
24 – 1-inch ASTM A325 bolts, washers, and nuts

Steel Posts
12 – steel W8x48 support posts (12 ft; ~ 600 lbs each)
48 – 1-inch ASTM A325 washers and nuts

Infrastructure
top perimeter rope (5/8" diameter; approximately 200 ft length)
bottom perimeter rope (5/8" diameter; approximately 170 ft length)
22 – friction brakes
12 – wire rope clips
2 – thimbles
shackles

tie-back anchor rope (5/8" diameter; approximately 60 ft length)
72 – wire rope clips
24 – thimbles
shackles

Panels
11 – cable net panels (15 ft x 12 ft; 8" diagonal weave, 5/16" cable; 5/8" perimeter rope)
lacing rope (5/16" diameter; approximately 650 ft length)
wire rope clips (5/16" diameter)

FOR INFORMATION ONLY

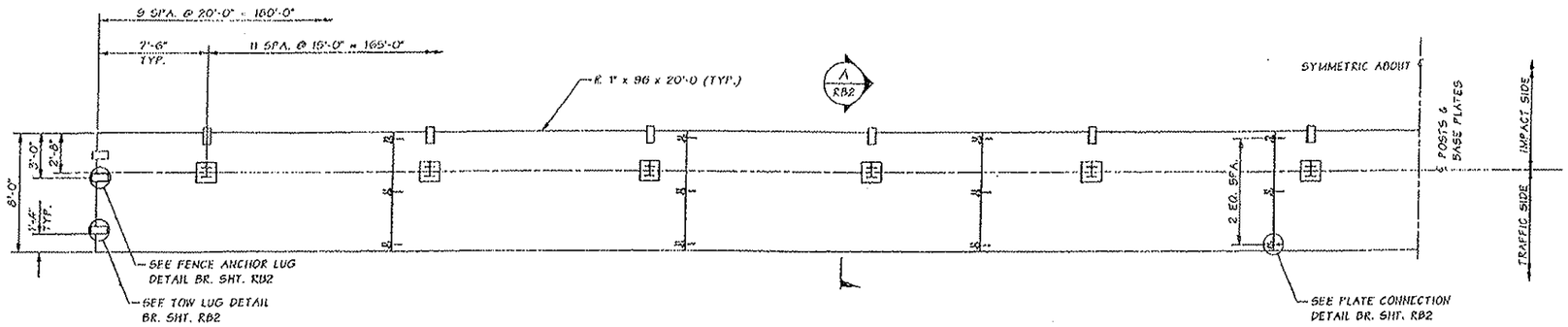

PLAN

2 SYSTEMS REQUIRED

ELEVATION

FOR INFORMATION ONLY

GENERAL NOTES

1. ALL MATERIAL AND WORKMANSHIP SHALL BE IN ACCORDANCE WITH THE REQUIREMENTS OF THE WASHINGTON STATE DEPARTMENT OF TRANSPORTATION STANDARD SPECIFICATIONS FOR ROAD, BRIDGE AND MUNICIPAL CONSTRUCTION - DATED 2006, AND AMENDMENTS.

2. STRUCTURAL STEEL SHALL MEET THE FOLLOWING MINIMUM REQUIREMENTS:

ANCHOR BOLTS	ASTM F1554 GR 36
PLATES	ASTM A-36

3. HIGH STRENGTH BOLTS SHALL BE ASTM A-325 AND SHALL BE 1"ø. NUTS AND WASHERS SHALL CONFORM TO STANDARD SPECIFICATIONS SECTION 9-06.5(3). BOLT HOLES SHALL BE 1/8" LARGER IN DIAMETER THAN THE BOLT, UNLESS OTHERWISE NOTED IN THE PLANS.

4. WELDING ELECTRODES SHALL BE LOW HYDROGEN AND MEET AWS D1.1 REQUIREMENTS.

5. ANCHORS SHALL BE CUT FLUSH WITH TOP OF PCC SLAB AND SHALL BE COATED WITH EPOXY RESIN. USE TYPE II EPOXY RESIN CONFORMING TO 9.26.1 WITH GRADE AND CLASS REQUIRED BY RESIN MANUFACTURER AND APPROVED BY ENGINEER.

6. ROCKFALL BARRIER MOVABLE FOUNDATION DESIGN LOADS ARE SHOWN IN PLANS AND ARE BASED ON A PROPRIETARY ROCKFALL BARRIER SYSTEM WITH A DESIGN CAPACITY OF 74 FT-TONS. ROCKFALL BARRIER SYSTEM USED SHALL MEET THOSE DESIGN LOADS.

* ROCKFALL BARRIER SYSTEM DESIGN AND DETAILS SHALL BE PROVIDED BY CONTRACTOR AND SUBMITTED TO WSDOT ENGINEER FOR APPROVAL.

SR I-90 JOB NO. 7254 SHEET RB1

Bridge Design Engr.	Stoddard, RB	
Supervisor	Zeldenrust, RP	
Designed By	Rochon, HJ	02/06
Checked By	Brown, NS	03/06
Detailed By	Rochon, HJ	03/06
Bridge Proj. Engr.		
Prelim. Eng By		
Architect/Specialist		

H:\Z-Team\ROCKFALL FENCE\Window files\LAYOUT.WND

DATE	REVISION	BY	APP'D

REGION NO.	STATE	FED. AID PROJ. NO.	SHEET NO.	TOTAL SHEETS
10	WASH.			

JOB NUMBER 09Y005

BRIDGE AND STRUCTURES OFFICE

4/5/06

Washington State Department of Transportation

I-90
MP 66 VIC. WB - ROCK REMOVAL & SLOPE STABILIZATION

MOVABLE ROCKFALL BARRIER LAYOUT

DRAWING SHEET NO. RB1

SHEET 18 OF 44 SHEETS

FOR INFORMATION ONLY

FILE NAME	G:\Engineering\PE305\PROJECTS\US 97A\Rocky Reach Unstable Slopes\N of Wenatchee Slope Stabilization\PS&E\CADD\XL3202.dgn
TIME	11:27:10 AM
DATE	12/17/2008
PLOTTED BY	Lance
DESIGNED BY	E. LANCE
ENTERED BY	B. TRAVIS
CHECKED BY	J. SAUGEN
PROJ. ENGR.	R. ROMINE
REGIONAL ADM.	D. SARLES

REVISION | DATE | BY

REGION NO.	STATE	FED.AID PROJ.NO.
10	WASH	STPF0097(129)

JOB NUMBER 09B008

CONTRACT NO.

LOCATION NO. XL 3202

THOMAS C. BADGER, STATE OF WASHINGTON, 35630, REGISTERED PROFESSIONAL ENGINEER

EXPIRES NOV. 8, 2009 DATE

P.E. STAMP BOX

DATE

P.E. STAMP BOX

Washington State Department of Transportation

US 97A
NORTH OF WENATCHEE
SLOPE STABILIZATION

MOVABLE ROCKFALL BARRIER REFERENCE

Plot 10

MRB1

SHEET 29 OF 50 SHEETS

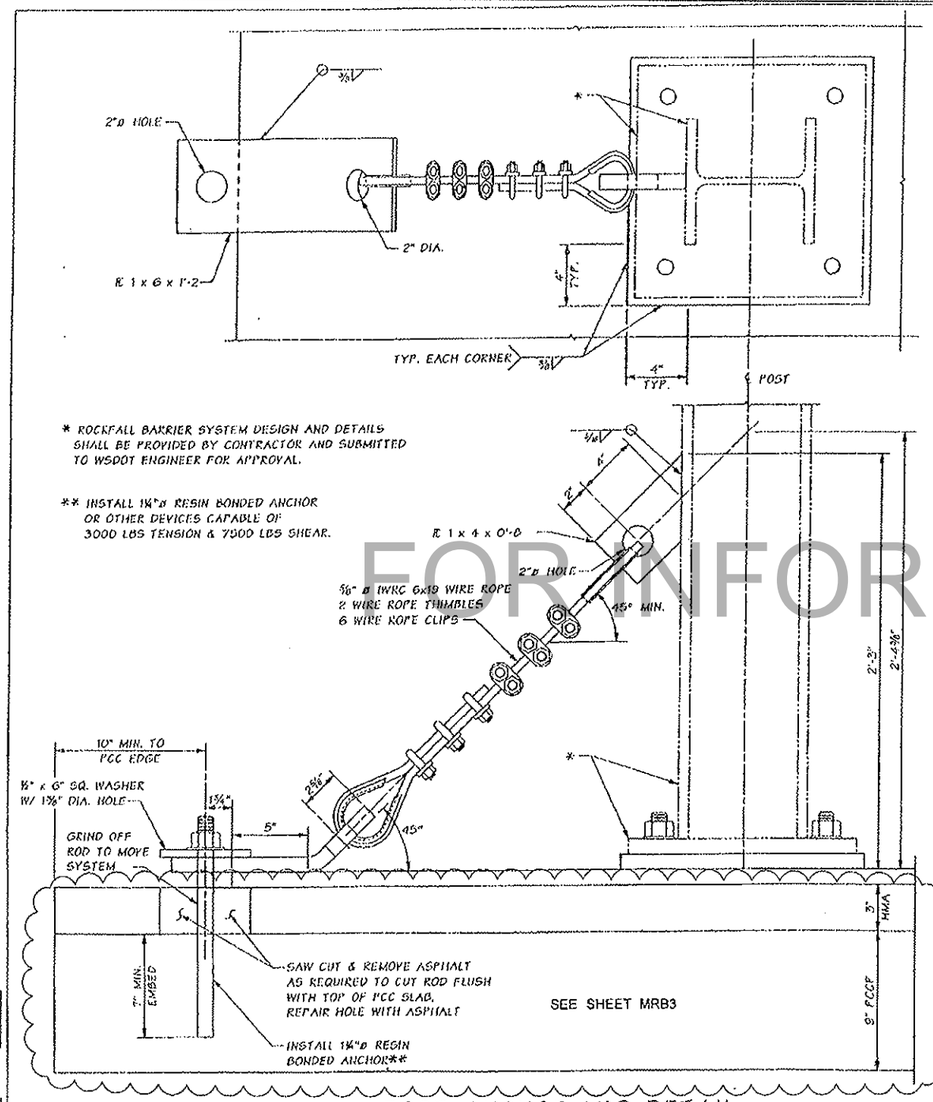

POST ANCHOR LUG DETAIL

12 REQUIRED PER SYSTEM

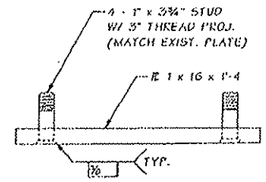

BASE PLATE DETAIL

12 ASSEMBLIES REQUIRED PER SYSTEM

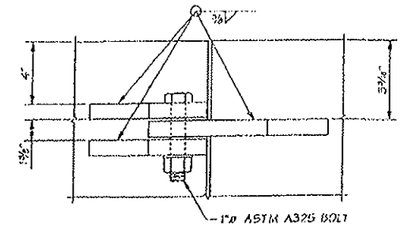

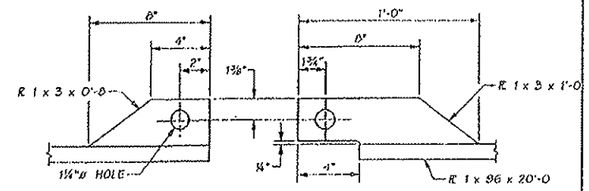

PLATE CONNECTION DETAIL

24 ASSEMBLIES REQUIRED PER SYSTEM

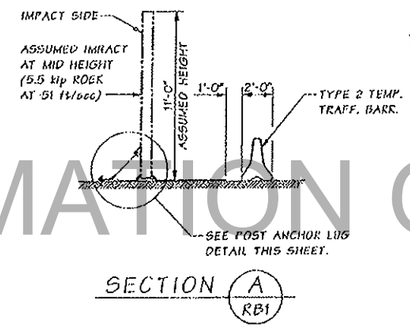

SECTION A RB1

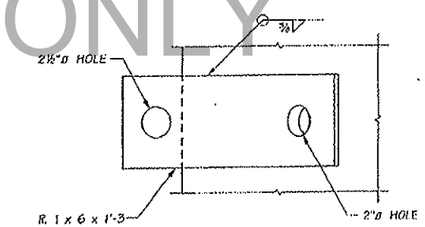

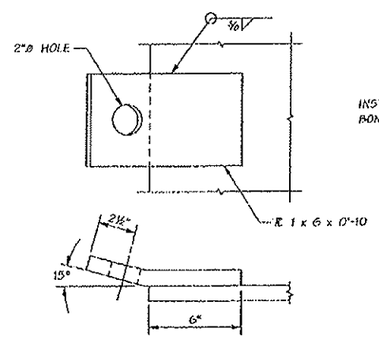

TOW LUG DETAIL

4 REQUIRED PER SYSTEM

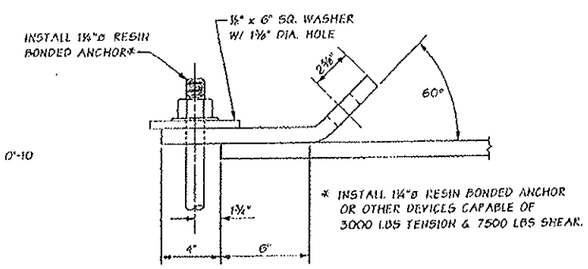

FENCE ANCHOR LUG DETAIL

2 REQUIRED PER SYSTEM

FOR INFORMATION ONLY

Bridge Design Engr.	Stoddard, RB		
Supervisor	Zeldenrust, RP		
Designed By	Rochon, MJ	02/06	
Checked By	Brown, NS	03/06	
Detailed By	Rochon, MJ	03/06	
Bridge Hydraulic Engr.			
Prelim. Hyd. By			
Architect/Engineer			

H:\Z-Team\ROCKFALL FENCE\Window files\DETAILS.WND

DATE	REVISION	BY	APVD

REGION NO.	STATE	FED. AID PROJ. NO.	SHEET NO.	TOTAL SHEETS
10	WASH.			

100 ROADWAY DESIGNS

BRIDGE AND STRUCTURES OFFICE

Washington State Department of Transportation

I-90
MP 66 VIC. WB - ROCK REMOVAL & SLOPE STABILIZATION

MOVABLE ROCKFALL BARRIER DETAILS

BRIDGE SHEET NO. RB2

SHEET 19 OF 44 SHEETS

INFORMATION THAT HAS BEEN MODIFIED ON SHEET MRB3

FOR INFORMATION ONLY

FILE NAME	G:\Engineering\PE306\PROJECTS\US 97A\Rocky Reach Unstable Slopes\N of Wenatchee Slope Stabilization\PS&E\CADD\XL3202.dgn
TIME	11:27:11 AM
DATE	12/17/2008
PLOTTED BY	Lance
DESIGNED BY	E. LANCE
ENTERED BY	B. TRAVIS
CHECKED BY	J. SAUGEN
PROJ. ENGR.	R. ROMINE
REGIONAL ADM.	D. SARLES

REVISION | DATE | BY

REGION NO.	STATE	FED.AID PROJ.NO.
10	WASH	STPF0097(129)

JOB NUMBER 09B008

CONTRACT NO.

LOCATION NO. XL 3202

THOMAS C. BADGER, STATE OF WASHINGTON, 20330, REGISTERED PROFESSIONAL ENGINEER

EXPIRES NOV. 8, 2009 DATE

P.E. STAMP BOX

P.E. STAMP BOX DATE

Washington State Department of Transportation

US 97A
NORTH OF WENATCHEE
SLOPE STABILIZATION

MOVABLE ROCKFALL BARRIER REFERENCE

Plot 11

MRB2

SHEET 30 OF 60 SHEETS

SR 1-90 JOB NO. 1256 SHEET 282

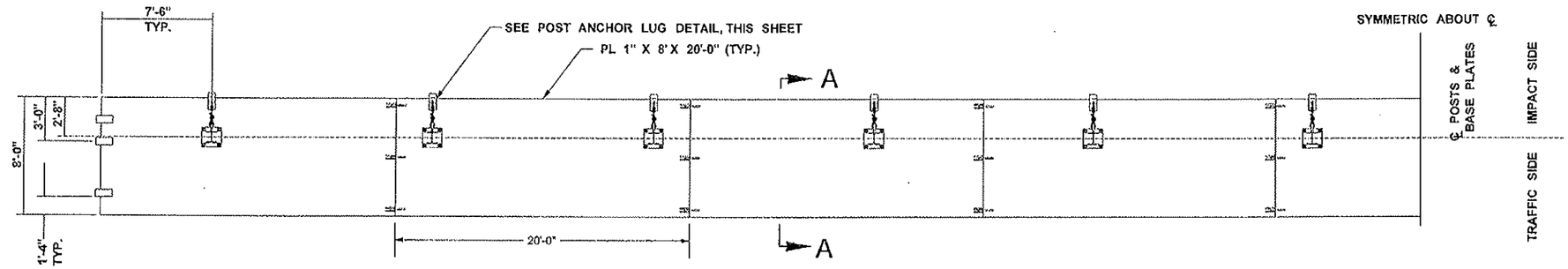

CONSTRUCTION NOTES:

1. FENCE IS CAPABLE OF BEING MOVED WITH ALL SEGMENTS ATTACHED AS A COMPLETE UNIT.
2. SEE SPECIAL PROVISION "MOVABLE ROCKFALL BARRIER"
3. MRB SHALL BE INSTALLED WITH THE FENCE SUPPORT POSTS PARALLEL TO THE ROADWAY CENTER LINE, AND OFFSET FROM THE ROADWAY EDGE OF PAVEMENT. SEE PLAN SHEETS RS1 AND RS2.

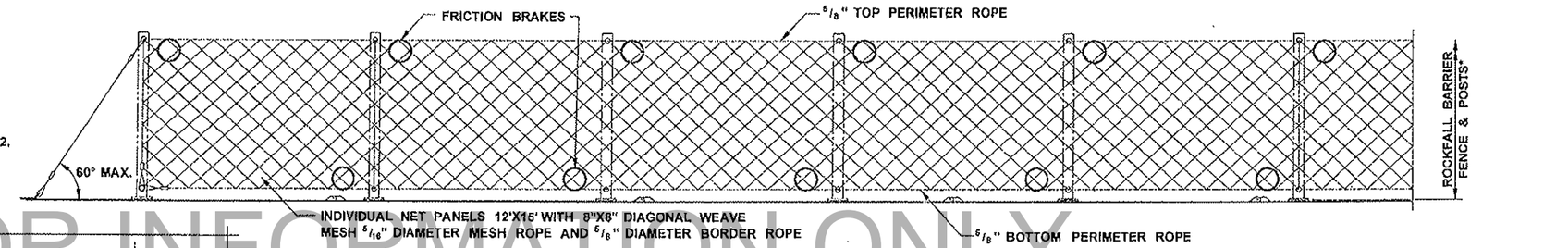

FOR INFORMATION ONLY

PLAN

SEE SPECIAL PROVISION "MOVABLE ROCKFALL BARRIER"

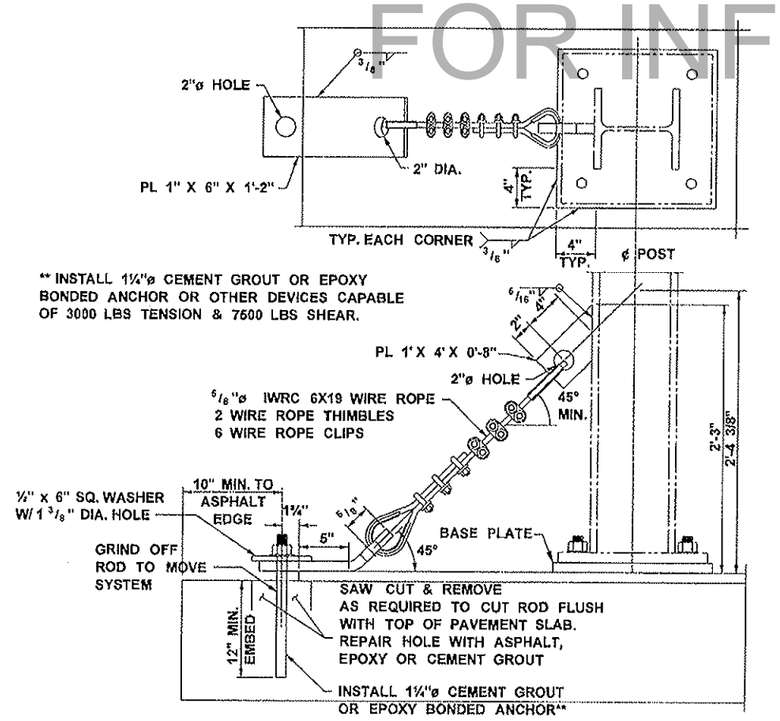

POST ANCHOR LUG DETAIL

12 REQUIRED PER SYSTEM

NOT TO SCALE

GENERAL NOTES:

1. SHEETS MRB1 AND MRB2 ARE ILLUSTRATIVE OF THE ORIGINAL DESIGN OF THE ROCKFALL BARRIER SYSTEM AND ARE INCLUDED ONLY FOR GENERAL REFERENCE AND INFORMATION SHOULD REPAIRS BE WARRANTED FOLLOWING USE OF THE MRB. SHEET MRB3 (THIS SHEET) DETAILS THE REQUIREMENTS FOR ASSEMBLING THE WSDOT-PROVIDEO BARRIER SYSTEM.

2. SEE SPECIAL PROVISIONS "MOVABLE ROCKFALL BARRIER", "MOVABLE ROCKFALL BARRIER ANCHORS", AND "RESETTING MOVABLE ROCKFALL BARRIER".

3. THE ORIGINAL POST ANCHOR LUG DETAIL SHOWN ON MRB2 HAS BEEN MODIFIED FOR THE ANTICIPATED PAVEMENT SECTION FOR THIS CONTTRACT. THE ORIGINAL DESIGN LOAD REQUIREMENTS SHOWN ON MRB2 SHALL BE MET.

4. PERIMETER ROPES SHALL BE AT LEAST 5/8" AND CONTINUOUS. BOTH TOP AND BOTTOM PERIMETER ROPES SHALL TERMINATE AT THE BOTTOM POST CABLE GUIDES ON THE OUTERMOST POSTS.

5. TWO FRICTION BRAKES ARE REQUIRED FOR EACH NET PANEL AND SHALL BE LOCATED IN OPPOSITE CORNERS APPROXIMATELY 3 FT FROM THE POSTS.

6. LACING ROPE FOR ATTACHING THE CABLE NET PANELS SHALL BE AT LEAST 5/16". LACING ROPE SHALL PASS THROUGH EACH CELL OF THE CABLE NET PANEL FOR CONNECTION TO THE PERIMETER ROPES AND THE VERTICAL SEAMS ON ADJACENT PANELS. LACING ROPE SHALL NOT GO THROUGH POST CABLE GUIDES OR FRICTION BRAKES. CABLE NET PANEL BORDER ROPES ALSO SHALL NOT BE CONNECTED TO POST CABLE GUIDES.

7. MORE DETAILED ASSEMBLEY INFORMATION AND A PARTS LIST IS AVAILABLE FROM THE ENGINEER.

FILE NAME	G:\Engineering\PE305\PROJECTS\US 97A\Rocky Reach Unstable Slopes\N of Wenatchee Slope Stabilization\PS&E\CADD\XL3202.dgn						
TIME	11:27:11 AM				REGION NO. 10	STATE WASH	FED.AID PROJ.NO. STPF0097(129)
DATE	12/17/2008						
PLOTTED BY	Lancee				JOB NUMBER 09B008		
DESIGNED BY	E. LANCE						
ENTERED BY	B. TRAVIS						
CHECKED BY	J. SAUGEN				CONTRACT NO.		LOCATION NO. XL 3202
PROJ. ENGR.	R. ROMINE						
REGIONAL ADM.	D. SARLES	REVISION	DATE	BY			

THOMAS C. BADGER, STATE OF WASHINGTON, 23650, REGISTERED PROFESSIONAL ENGINEER
EXPIRES NOV. 8, 2009 DATE
P.E. STAMP BOX

DATE
P.E. STAMP BOX

Washington State Department of Transportation

US 97A
NORTH OF WENATCHEE
SLOPE STABILIZATION

MOVABLE ROCKFALL BARRIER

Plot 36
MRB3
SHEET 31 OF 50 SHEETS

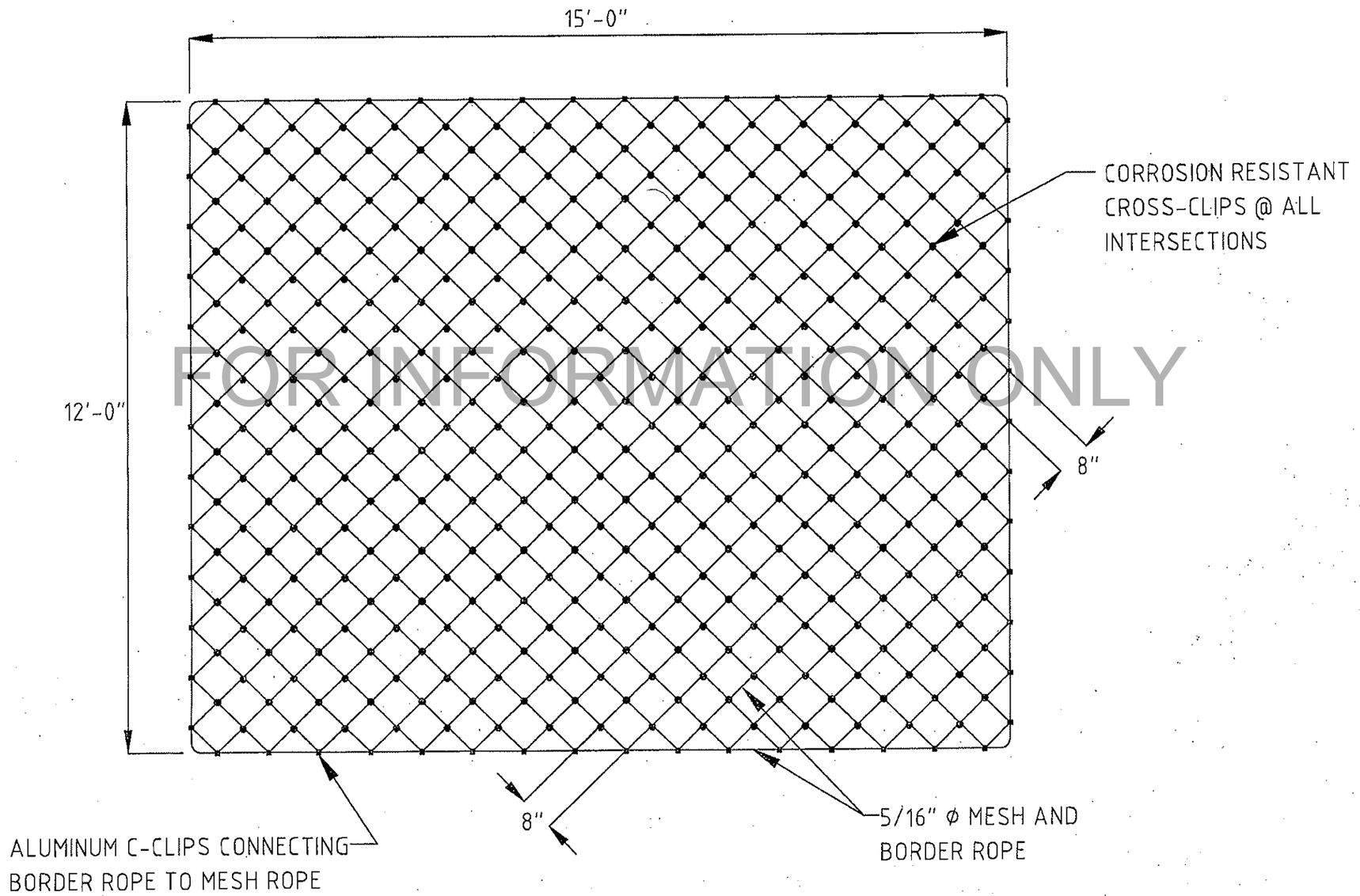

FOR INFORMATION ONLY

12'x15' Wire Rope Net Panel, 8" Diagonal Weave

DESIGNED	REB
DRAWN	AEB
CHECKED	REB
JOB NO.	08-NYAK
DATE	9/22/10

NO.	REVISION DESCRIPTION	DATE

12'x15' NET PANEL
8" DIAGONAL WEAVE

CHAMA VALLEY PRODUCTION CO.
State Road 95 # 265, HC75 Box 1317
Rutheron, New Mexico 87551
(575) 588-0332, (575)588-0336 fax
Email: chamaproducts@gmail.com

ENGINEER'S SEAL

SHEET TITLE
12'x15'
Net Panel

DWG
12'x15' Net Panel
SHEET 1 OF 1

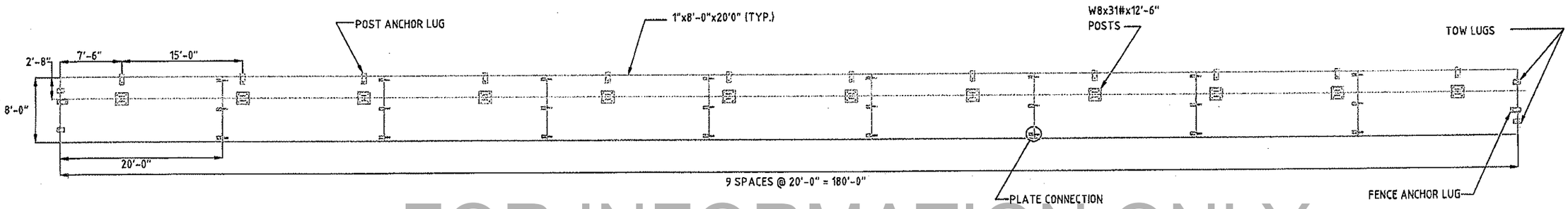

FOR INFORMATION ONLY

PLAN VIEW

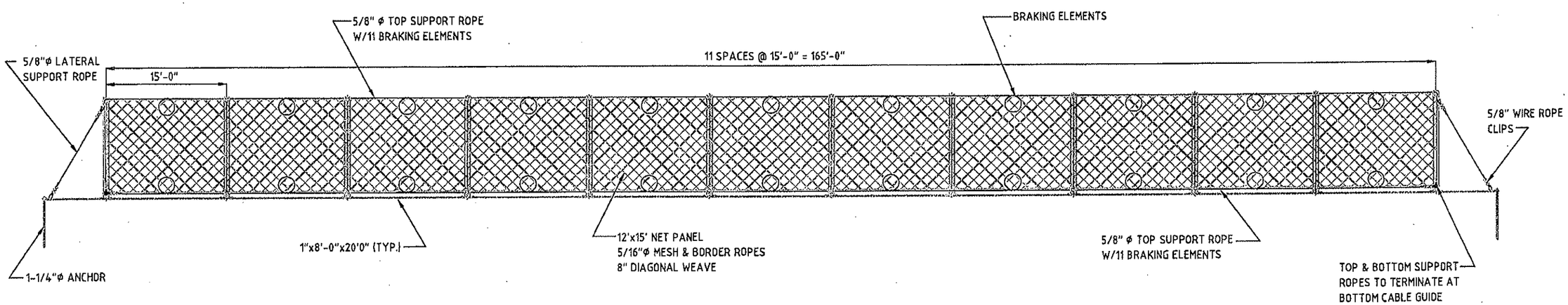

FRONT ELEVATION

DESIGNED	REB
DRAWN	AEB
CHECKED	REB
JOB NO.	08-HYAK
DATE	9/27/10

NO.	REVISION DESCRIPTION	DATE

WASHINGTON DOT I-90
HYAK TO SNOWSHED
MOVEABLE ROCKFALL BARRIER

CHAMA VALLEY PRODUCTION CO.
State Road 95 # 265, HC75 Box 1317
Rutheron, New Mexico 87551
(575) 588-0332, (575)588-0336 fax
Email: chamaproducts@gmail.com

ENGINEER'S SEAL

SHEET TITLE
Moveable Rockfall Barrier

DWG
MRB Layout

SHEET 1 OF 3

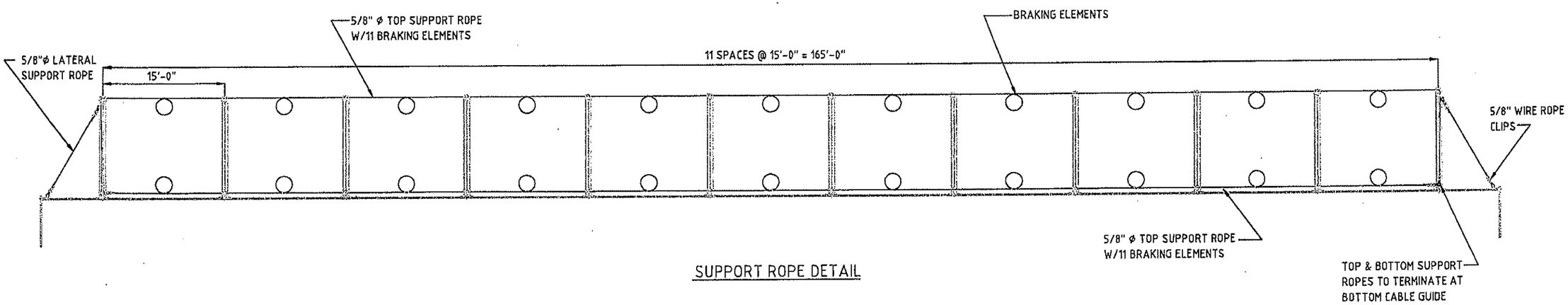

SUPPORT ROPE DETAIL

FOR INFORMATION ONLY

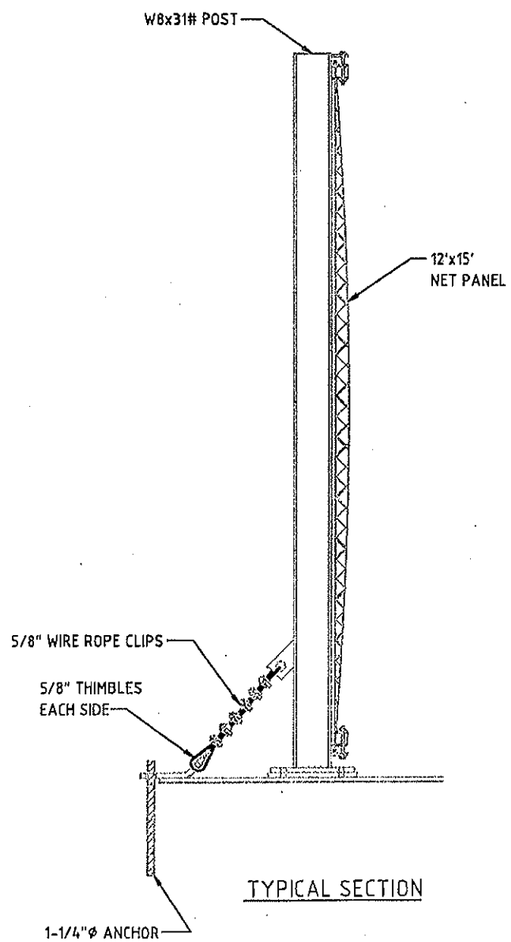

TYPICAL SECTION

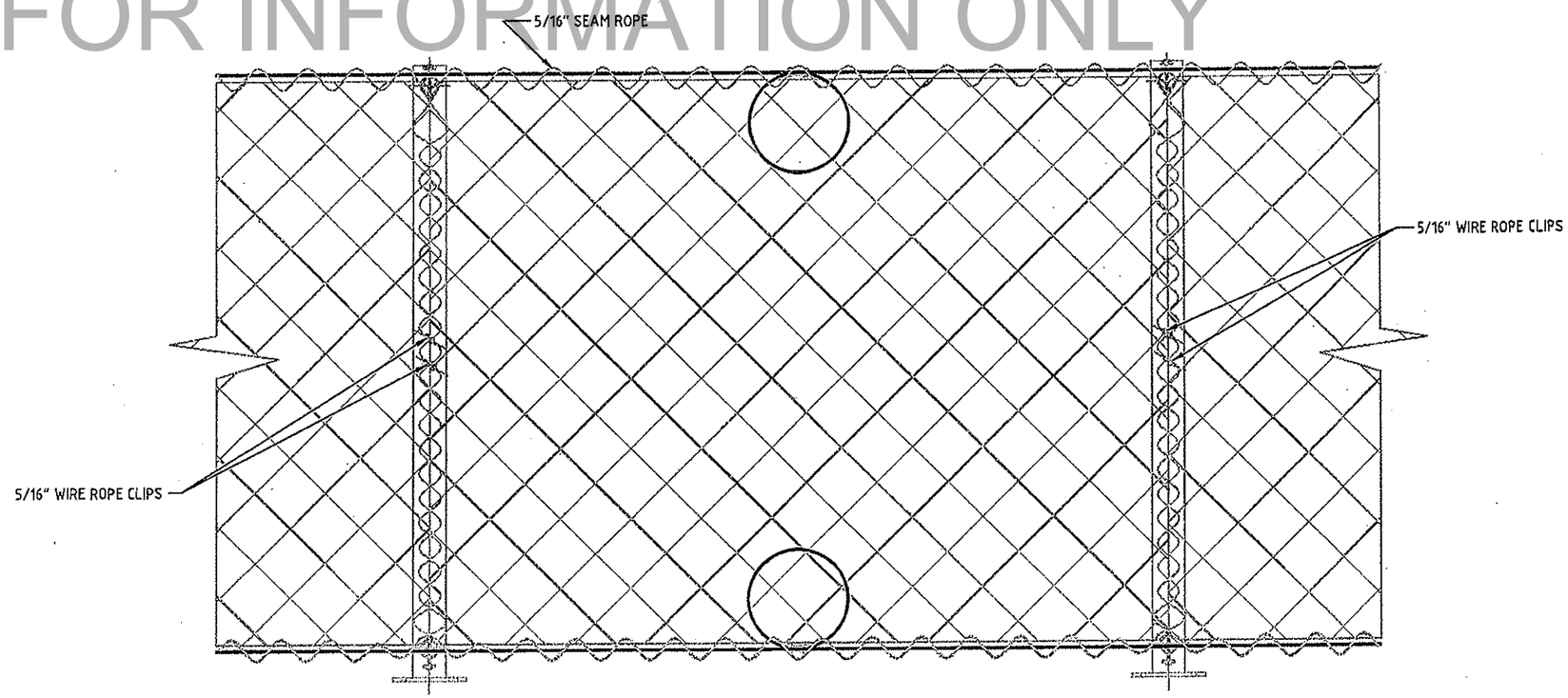

SEAMING DETAIL

NO.	REVISION DESCRIPTION	DATE

DESIGNED	REB
DRAWN	AEB
CHECKED	REB
JOB NO.	RM/MK
DATE	9/27/18

WASHINGTON DOT I-90
HYAK TO SNOWSHED
MOVEABLE ROCKFALL BARRIER

CHAMA VALLEY PRODUCTION CO.
State Road 95 # 265, HC75 Box 1317
Rutheron, New Mexico 87551
(575) 588-0332, (575)588-0336 fax
Email: chamaproducts@gmail.com

ENGINEER'S SEAL

SHEET TITLE
Moveable Rockfall Barrier

DWG
MRB Details

SHEET 2 OF 3

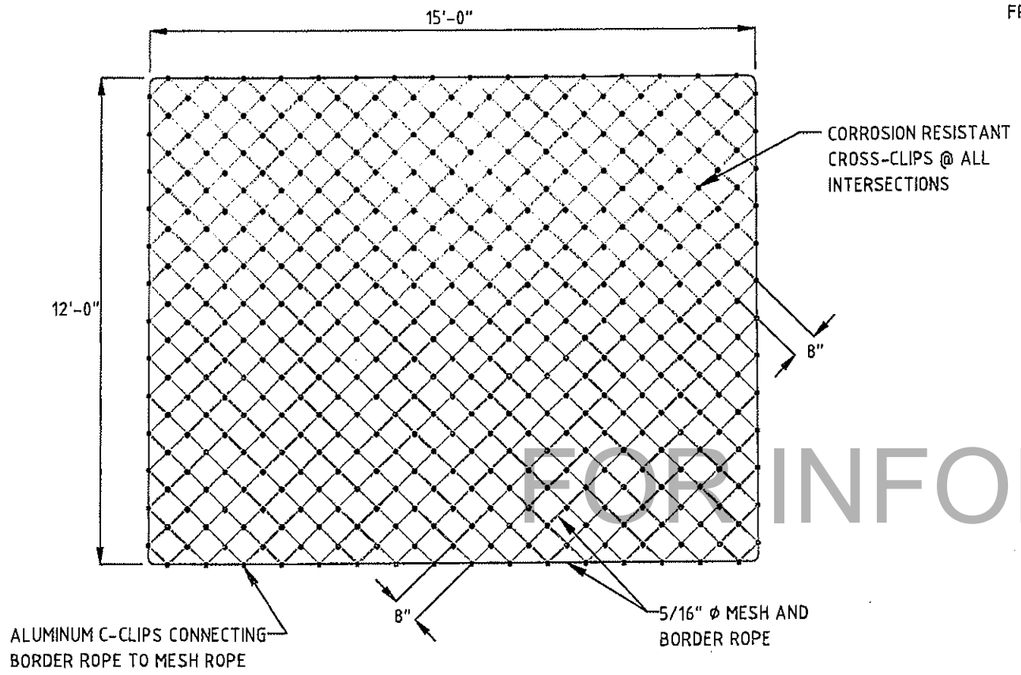

12'x15' Wire Rope Net Panel, 8" Diagonal Weave

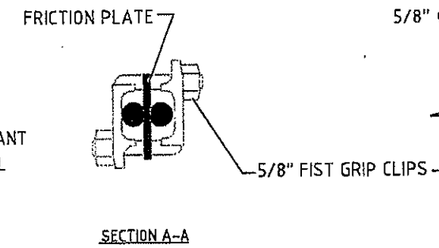

SECTION A-A

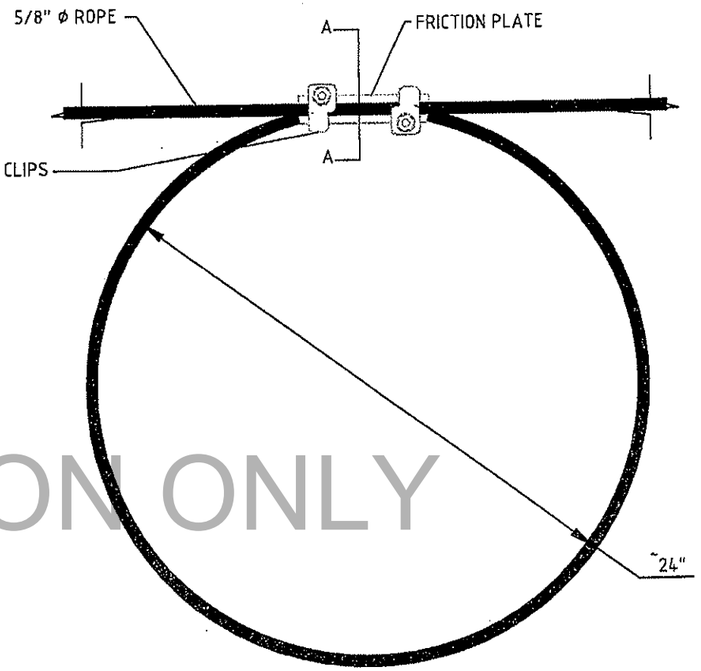

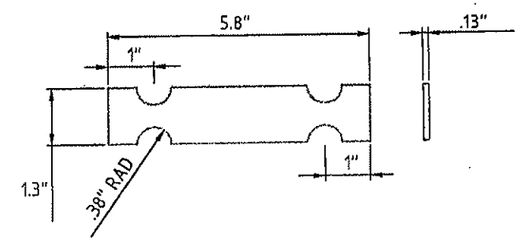

BRAKING ELEMENT

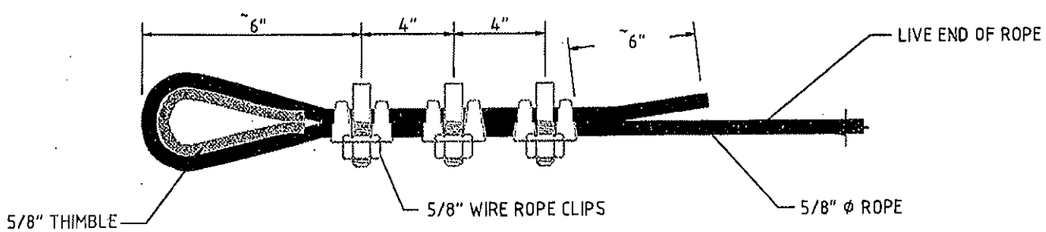

5/8" WIRE ROPE CLIP LOOP

NOTE:
1. ALWAYS PLACE SADDLE OF CLIP ON LIVE ROPE END, U-BOLT ON DEAD END
2. TORQUE ON U-BOLT NUTS: 95 FT-LBS.

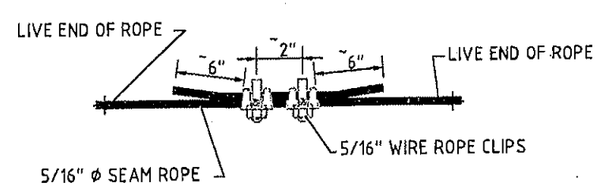

5/16" WIRE ROPE CLIP SPLICE

NOTE:
1. ALWAYS PLACE SADDLE OF CLIP ON LIVE ROPE END, U-BOLT ON DEAD END
2. TORQUE ON U-BOLT NUTS: 35 FT-LBS.

FOR INFORMATION ONLY

DESIGNED	REB	
DRAWN	AEB	
CHECKED	REB	
JOB NO.	CHAMA	
DATE	9/27/10	

NO.	REVISION DESCRIPTION	DATE

WASHINGTON DOT I-90
HYAK TO SNOWSHED
MOVEABLE ROCKFALL BARRIER

CHAMA VALLEY PRODUCTION CO.
State Road 95 # 265, HC75 Box 1317
Rutheron, New Mexico 87551
(575) 588-0332, (575)588-0336 fax
Email: chamaproducts@gmail.com

ENGINEER'S SEAL

SHEET TITLE
Moveable Rockfall Barrier

DWG
MRB Details2

SHEET 3 OF 3